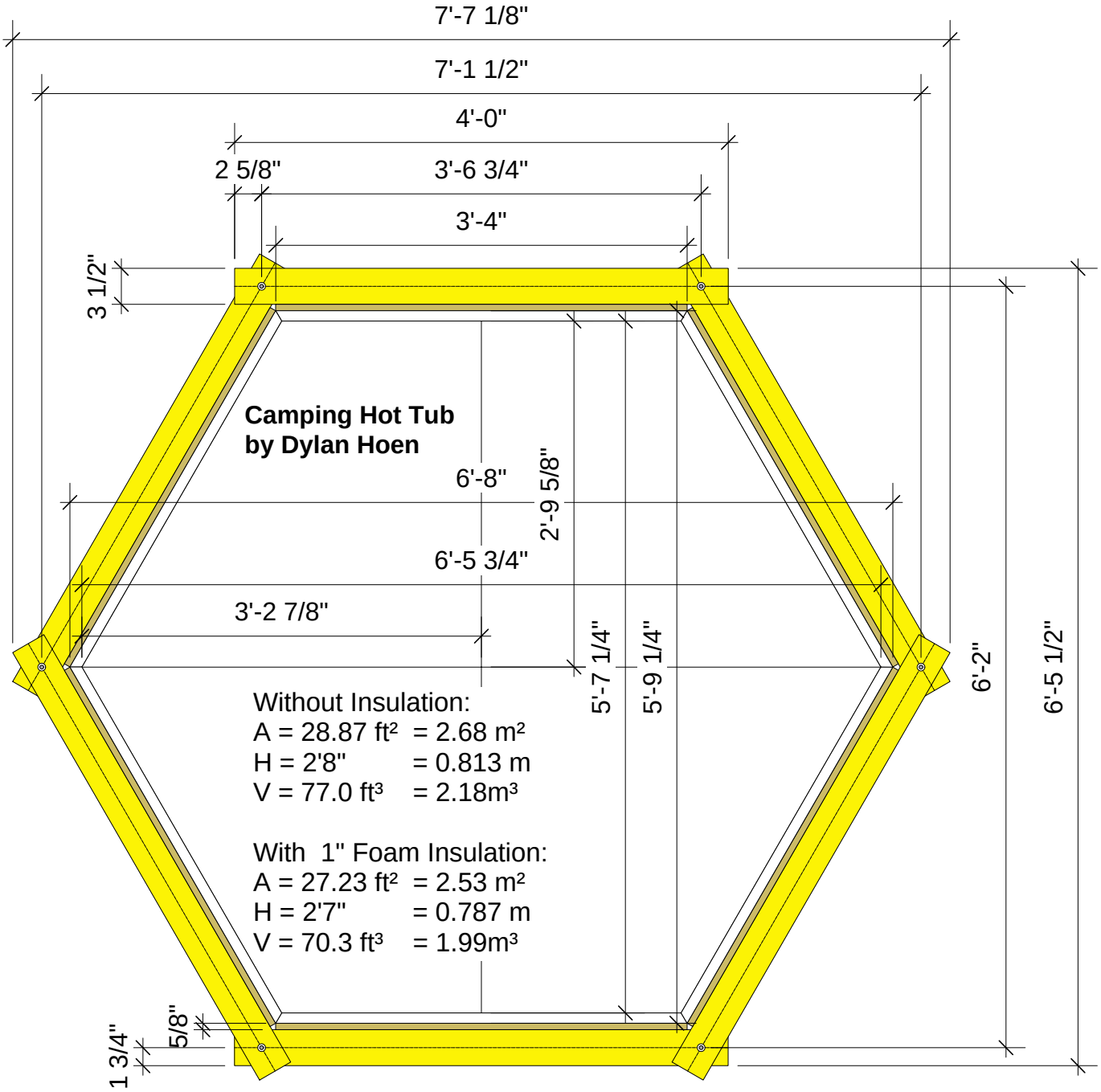
7'-7 1/8"
7'-1 1/2"
4'-0"
2 5/8"
3'-6 3/4"
3'-4"
3 1/2"
Camping Hot Tub
by Dylan Hoen
6'-8"
2'-9 5/8"
6'-5 3/4"
3'-2 7/8"
5'-7 1/4"
5'-9 1/4"
6'-2"
6'-5 1/2"
Without Insulation:
A = 28.87 ft² = 2.68 m²
H = 2'8" = 0.813 m
V = 77.0 ft³ = 2.18m³
With 1" Foam Insulation:
A = 27.23 ft² = 2.53 m²
H = 2'7" = 0.787 m
V = 70.3 ft³ = 1.99m³
5/8"
1 3/4"

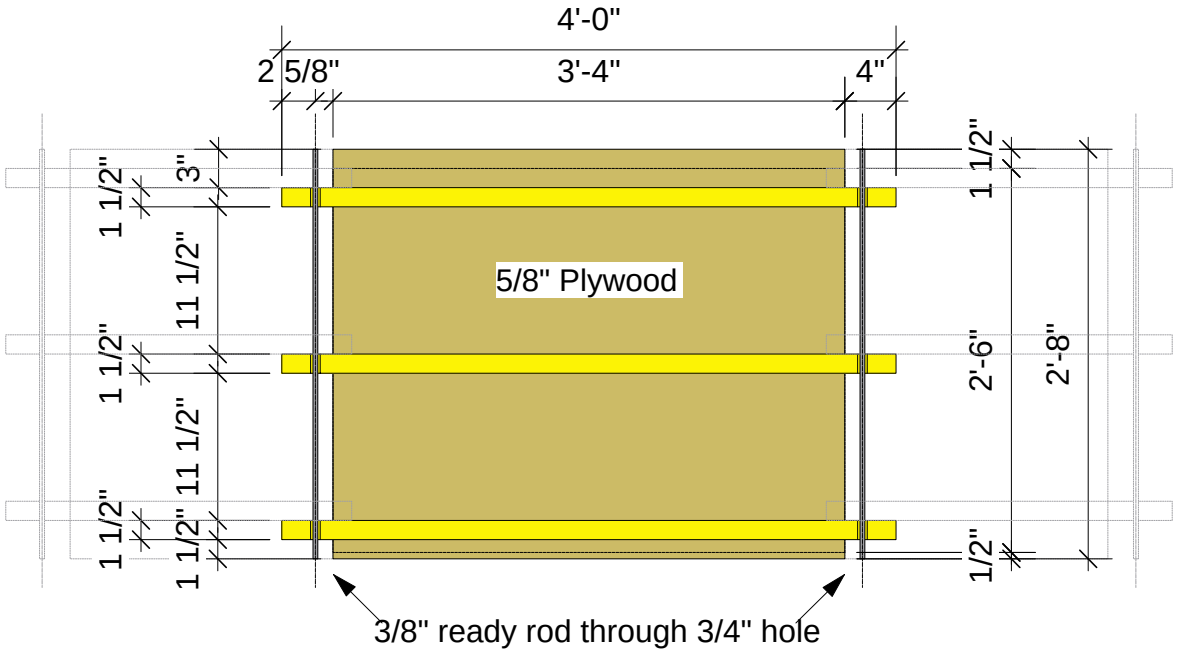
4'-0"
2 5/8"
3'-4"
4"
1 1/2"
3"
11 1/2"
1 1/2"
11 1/2"
1 1/2"
1 1/2"
5/8" Plywood
1 1/2"
2'-6"
2'-8"
1/2"
3/8" ready rod through 3/4" hole